engelmann
smartest metering technology

Engelmann Flow Sensor

FlowStar U

Ultrasonic flow sensor

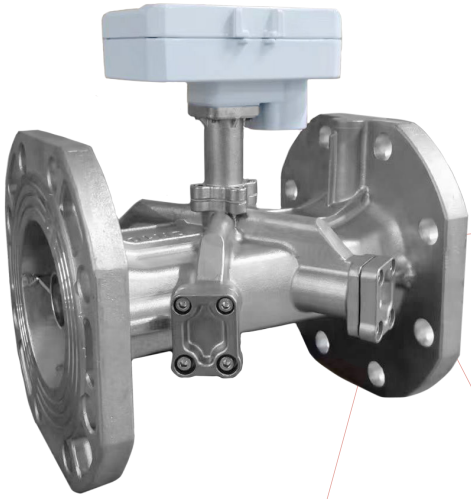

DN 50 – DN 100

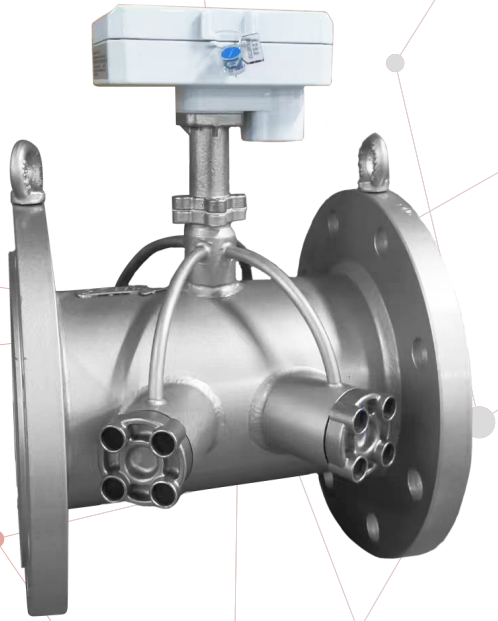

DN 125 – DN 300

Precise flow measurement with dual-channel ultrasonic measuring

High quality with stainless-steel body for DN 50 to DN 300 and stainless-steel flanges for DN 50 to DN 100

Measuring components in aluminum housing

Status 2026/12/05 Subject to technical change!

Engelmann Sensor GmbH I Rudolf-Diesel-Straße 24 - 28 I 69168 Wiesloch, Germany

Overview

FLOWSTAR U

The FlowStar U impresses with its flexible usability and high temperature range. With a temperature range of 1 – 130 °C, the flow sensor fulfills all requirements. This makes it an ideal solution for a wide range of applications and demanding environments. From DN 50 to DN 300, it is the ideal extension to the compact meters SensoStar U.

The FlowStar U flow sensor records the flow rate using high-precision ultrasonic measurement technology, guaranteeing you reliable and accurate volume measurement that meets the highest demands. In combination with the SensoStar C calculator and the temperature sensors, the thermal energy can be calculated precisely and efficiently. This enables comprehensive and exact energy control and billing.



Features & Range of Functions

- Sizes: DN 50 to DN 300
- Meters from Qp 15 to Qp 600
- Horizontal, vertical, overhead installation
- Pressure classes PN16/PN25
- Connection cable with 10 m length
- Battery capacity of up to 12 years

General data

Measuring method		ultrasonic; dual channel
Accuracy class (MID)		class 2
Mechanical class (MID)		M2 (EN 1434)
Electromagnetic class (MID)		E2 (EN 1434)
Protection class		IP68
Medium		water
Calming section		U0D0
Approvals		DE-26-MI004-PTB002 CE
Mounting position		any position
Point of installation		outlet flow / inlet flow; consider configuration of the calculator
Battery capacity, designed	years	up to 12
Battery supply	V	3.6
Temperature measurement range medium	°C	1 – 130 (150 within 2000 hours)
Storage and transport temperature range	°C	-25 – 55
Ambient temperature in the field	°C	5 – 55
Maximum height of installation point	m	2000 above mean sea level

FlowStar U

TECHNICAL DATA

Pulse output according to EN 1434-2

Class		open collector (OC)
Cable length	m	10
Min. pulse length	ms	50
Volume pulse maximum input voltage	V	12 DC
Volume pulse maximum input current	mA	10

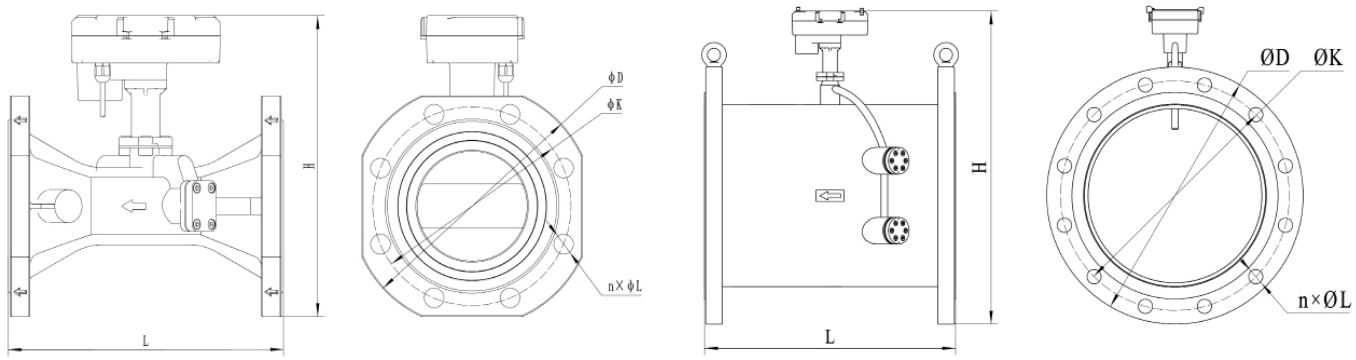

Flow values

Nominal diameter	mm	DN 50	DN 65	DN 80	DN 100	DN 125	DN 150	DN 200	DN 250	DN 300
Nominal flow Qp	m³/h	15	25	40	60	100	150	250	400	600
Low flow threshold value	m³/h	0.01	0.02	0.03	0.05	0.08	0.1	0.2	0.3	0.4
Minimum flow Qi	m³/h	0.15	0.25	0.4	0.6	1	1.5	2.5	4	6
Maximum flow Qs	m³/h	30	50	80	120	200	300	500	800	1200
Pressure drop Qp	bar	0.04	0.06	0.09	0.11	0.07	0.06	0.04	0.04	0.04
Pulse value	l/pulse	25	25	100	100	100	250	250	1000	1000

Max. operation pressure PN16

Nominal diameter	mm	DN 50	DN 65	DN 80	DN 100	DN 125	DN 150	DN 200	DN 250	DN 300
Length (L)	mm	200	200	225	250	350	350	350	400	450
Diameter (D)	mm	165	185	200	220	250	285	340	405	460
Height (H)	mm	221	232	253	273	360	390	450	510	565
Hole circle (K)	mm	125	145	160	180	210	240	295	355	410
Number screw x diameter	mm	4x18	4x18	8x18	8x18	8x18	8x22	12x22	12x26	12x26
Weight	kg	8.7	12.4	12.5	20.3	36.0	42.0	54.0	75.0	101.0

Max. operation pressure PN25

Nominal diameter	mm	DN 50	DN 65	DN 80	DN 100	DN 125	DN 150	DN 200	DN 250	DN 300
Length (L)	mm	200/270	200/300	225/300	360	350	350	350	400	450
Diameter (D)	mm	165	185	200	235	270	300	360	425	485
Height (H)	mm	221	232	253	282	370	400	450	520	575
Hole circle (K)	mm	125	145	160	190	220	250	310	370	430
Number screw x diameter	mm	4x18	8x18	8x18	8x22	8x26	8x26	12x26	12x30	16x30
Weight	kg	9.5	12.4	15.2	20.3	40.0	42.0	54.0	75.0	101.0

Contact us here:

+49 6222 98 00 188 (Orders)
+49 6222 98 00 2727 (Technical Service)
+49 6222 98 00 0 (Head Office)

info@engelmann.de

Engelmann Sensor GmbH
Rudolf-Diesel-Straße 24-28
69168 Wiesloch-Baiertal
Germany

www.engelmann.de