engelmann
smartest metering technology

Engelmann Heat Meter

SensoStar I / T / M

Mechanical flow sensors for installation points IST, TE1, M60

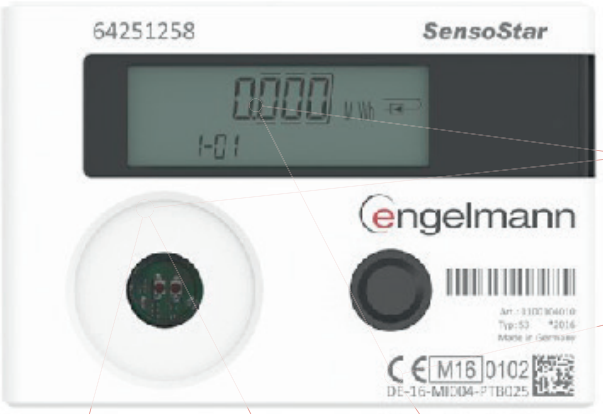

- Most accurate measurement results using the multi-jet principle
- Various installation options due to a large selection of interfaces
- Flexible communication based on modular system
- Fast response due to dynamic temperature measurement cycle

Precise heat/cooling measurement

The SensoStar I / T / M is a high-precision measuring device that uses inductive sensing to record heat or cooling energy. The comprehensive range covers all common installation interfaces as well as a variety of temperature sensor and communication variants.

We speak your language

The continuously growing portfolio of communication modules offers you a wide range of remote readout options.

RADIO MODULES

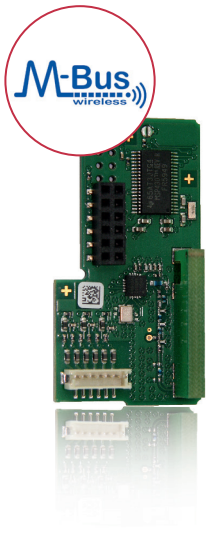

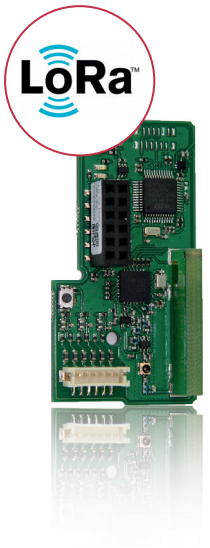

WIRED MODULES

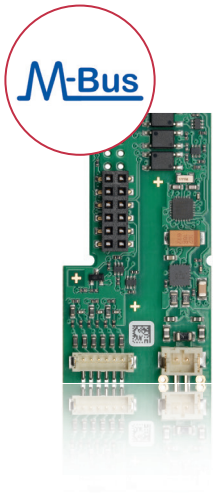

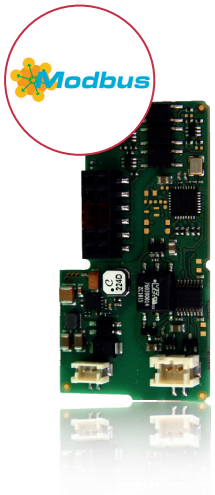

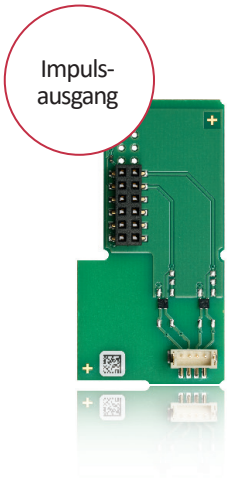

Features

- Meters from qp 0.6 to qp 2.5
- Installation points: IST, TE1, M60
- Horizontal / vertical / overhead installation
- Installation point and display unit adjustable on site
- Return flow detection
- Detachable calculator with 0.50 m connection cable
- Battery life of up to 20 years

wM-Bus, LoRaWAN and M-Bus can also be equipped with 3 pulse inputs to connect other devices.

SensoStar I / T / M

TECHNICAL DATA

1. Flow sensor

Sizes	**Nominal flow rate qp m³/h**	m³/h	0.6	1.5	2.5
	Low flow threshold value	l/h	4	4	5.5
	Minimum flow qi	l/h	30	30	50
	Maximum flow qs	m³/h	1.2	3	5
Pressure drop Δp at qp		bar	0.1	0.2	0.24
Pressure drop Δp at qs		bar	0.4	0.74	0.92
Nominal diameter		mm	DN 15	DN20	DN15
Dynamic range qi/qp		-	1:20	1:50	1:50

Measuring method		bidirectional inductive scanning system
Accuracy class (MID)		Class 3
Nominal pressure PN	bar	16
Temperature range medium heat	°C	15 – 90
Temperature range medium cooling (from qp 1.5 to qp 2.5)	°C	5 – 50
Point of installation		outlet flow and inlet flow; can be set when the amount of energy is still ≤ 10 kWh
Mounting position		any position (horizontal, vertical, overhead)
Protection class		IP65
Medium		water; optional, without approval*: water with a propylene glycol or ethylene glycol percentage rate of 20 %, 30 %, 40 % or 50 % (* type and concentration of glycol can be set at any time)

2. Calculator

Temperature range medium	°C	0 – 150 heat / 0 – 50 cooling (qp 1.5 and qp 2.5)
Ambient temperature in the field	°C	5 – 55 at 95 % relative humidity
Transport temperature	°C	-25 – 70 (for max. 168 h)
Storage temperature	°C	-25 – 55
Temperature difference range ΔΘ heat	K	3 – 100
Temperature difference range ΔΘ cooling	K	-3 –-50
Minimum temperature difference ΔΘ heat	K	> 0.05
Minimum temperature difference ΔΘ cooling	K	<-0.05
Minimum temperature difference ΔΘ heat / cooling	K	> 0.5 / <-0.5
Resolution temperature	°C	0.01
Measuring cycle temperature; dynamic	s	2 / 60; using a power pack: 2 s permanent

SensoStar I / T / M

TECHNICAL DATA

Display		LCD – 8 digits + special characters
Displayed thermal energy		up to 3 decimal places
Units		MWh, kW, m³, m³/h (kWh, GJ, MMBTU, Gcal); unit of energy can be set when the amount of energy is still ≤ 10 kWh
Interfaces		optical interface (M-Bus protocol); *optional communication:* radio: wireless M-Bus*, LoRaWAN*; wired: M-Bus*, Modbus, 2 pulse outputs
Power supply		easily replaceable 3 V lithium battery; preparation for 3 V power pack available (input voltage 230 V / 24 V)
Estimated lifetime	years	20 without communication module; 16 with M-bus hourly readout; 15 with M-Bus 10 minute readout; 10 with others e.g. wM-bus, Modbus, LoraWAN
Data storage		24 monthly and semi-monthly values
Billing dates		freely selectable annual reference date; 15 monthly and semi-monthly values via display or radio (compact mode); 24 monthly and semi-monthly values via optical interface or M-Bus
2 tariff registers		individually adjustable; store energy or time
Storage of the maximum values		flow, power and temperatures (inlet, outlet, ΔΘ) as well as the respective maximum values of the last 15 months
Protection class		IP65
CE		yes
EMV		EN 1434

* Optional with 3 pulse inputs.

3. Temperature sensors (2-wire technology)

Platinum precision resistor		Pt 1000
Sensor diameter	mm	UTS: 5; 5.2; 6; AGFW: 27.5; 38; needle sensor: 3.5 x 75
Connection cable length	m	1.5; 3; 6
Installation type		asymmetrical; symmetrical

4. Weights

Weight (standard version in kg)	Variant I	Variant T	Variant M
Calculator not detachable	0.655	–	–
Calculator detachable	0.700	0.780	0.700

5. Dimensions

Pulse cable length (only separable version)	m	0.50	
Calculator housing (H x W x D)	mm	75 x 110 x 34.5	
Connection thread	Variant I: 2”	Variant T: M62 x 2	Variant M: M60 x 1.5

SensoStar I / T / M

TECHNICAL DATA

SensoStar I

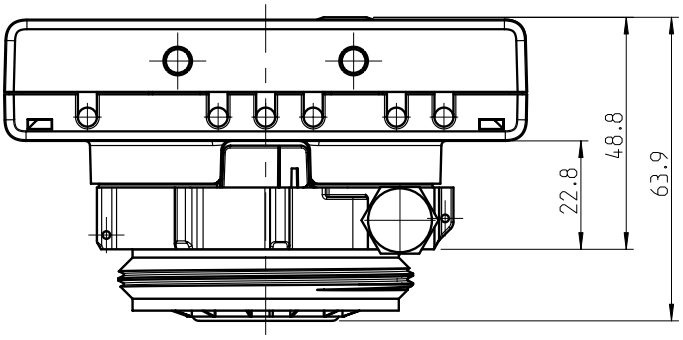

SensoStar M

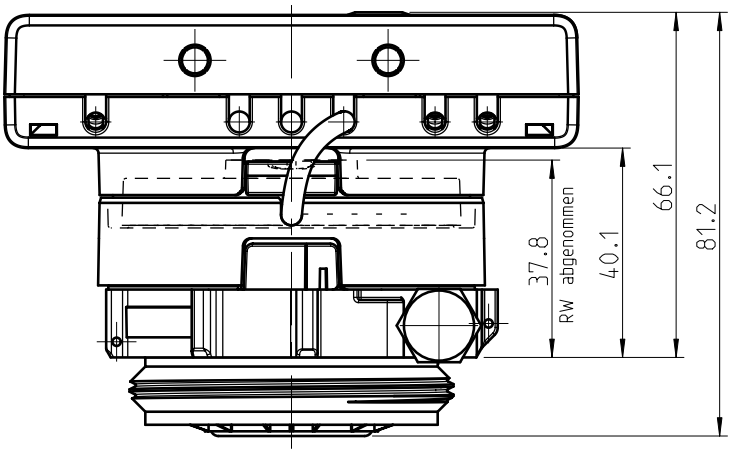

SensoStar T

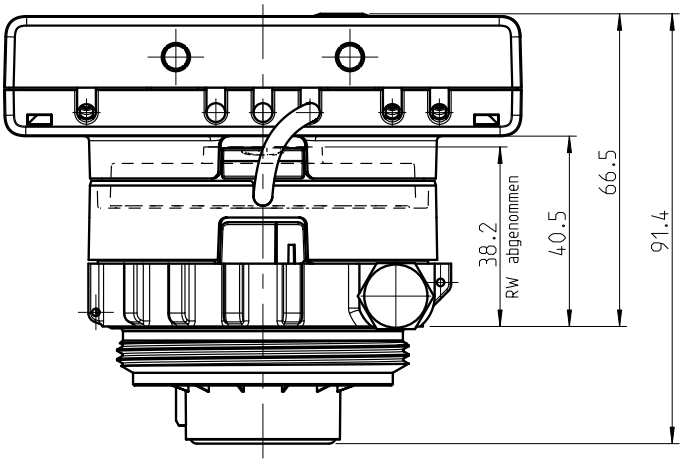

PRESSURE DROP SENSOSTAR I / T / M

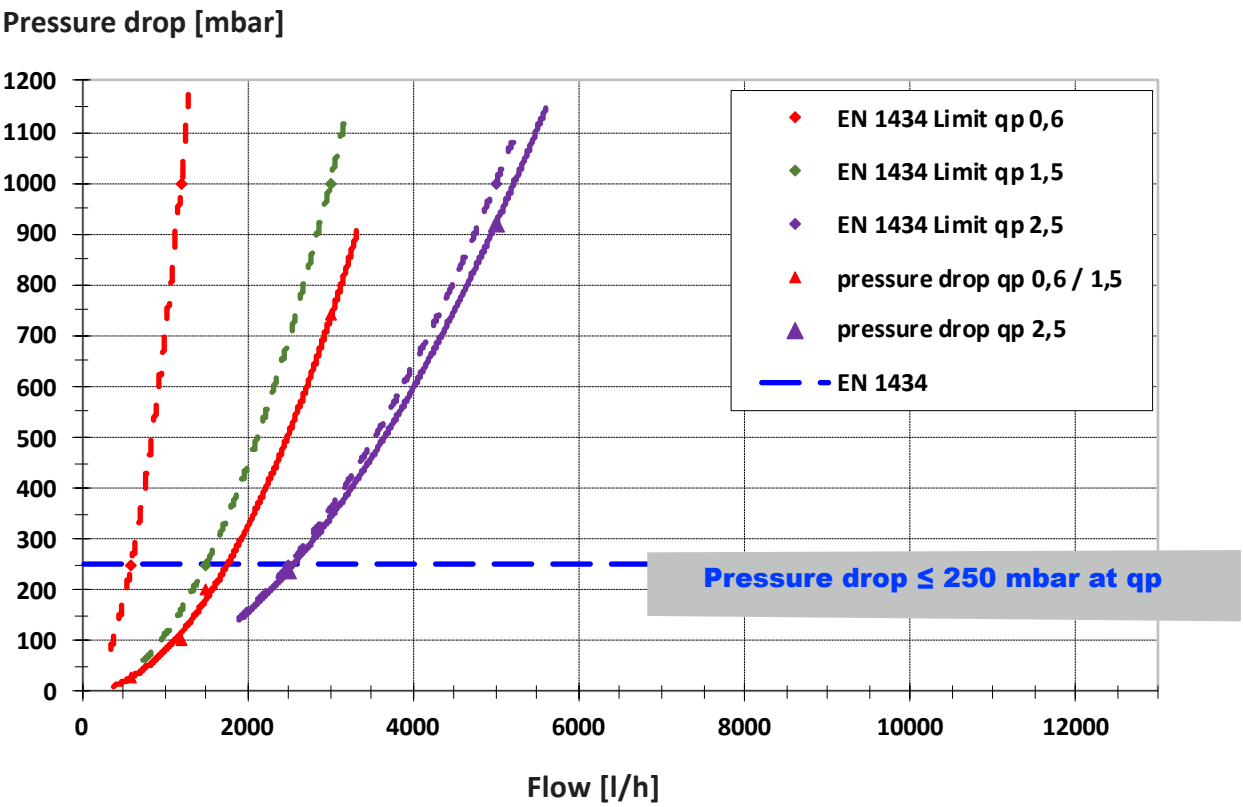

Contact us here:

+49 6222 98 00 188 (Orders)
+49 6222 98 00 2727 (Technical Service)
+49 6222 98 00 0 (Head Office)

info@engelmann.de

Engelmann Sensor GmbH
Rudolf-Diesel-Straße 24-28
69168 Wiesloch-Baiertal
Germany

www.engelmann.de